

# 污水处理固液分离设备

## YOSUN ENVIRONMENTAL

无锡源申环保设备有限公司

Wuxi Yosun Environmental Protection Equipment Co.,Ltd.

科技改变环境 技术创造价值

# 产品手册

PRODUCT CATALOG

源申环保

YOSUN ENVIRONMENTAL

源申环保
YOSUN ENVIRONMENTAL

Professional supplier of solid liquid separator for waste water treatment

# 中心传动式刮泥机
# Center Drive Sludge Scraper

Professional design | Exquisite craftsmanship | Focus on separating

## 产品简介

中心传动式刮泥机是一种辐流式沉淀池的配套刮泥设备。辐流式沉淀池从中间进水，污泥沉降到池底，清水从顶部四周集中后排出。该设备通过中心驱动带动底部刮泥机构旋转，在旋转过程中将沉淀在池体底部的沉淀物集中至中间集中区域，再通过排泥口统一排出。中心传动刮泥机还有池体表面阻挡刮除浮渣的功能，该功能是选配。



## Sludge Scraper

Center drive sludge scraper is a supporting equipment of radial sedimentation clarifier.Water inflowing into the clarifier from the middle part, the sludge sinks to the bottom of the tank. Clean water flows out and the bottom sludge is scrapered to the pit and finally discharged. The central drive scraper also has the function of blocking and scraping the scum on the surface of the tank, which is optional.









源申环保
YOSUN ENVIRONMENTAL

Professional supplier of solid liquid separator for waste water treatment

Professional design　Exquisite craftsmanship　Focus on separating

## 构造以及工作过程

中心传动悬挂式刮泥机由工作桥、驱动装置、传动轴、刮臂及刮泥板、拉索、水下轴承、泥斗搅拌桨、稳流筒和系统控制柜等组件组成。

中心传动悬挂式刮泥机运行时，由安装在工作桥上的驱动装置驱动传动轴旋转，传动轴旋转时带动两侧刮臂绕池中心轴线旋转，安装在刮臂上的一组刮泥板在随刮臂旋转中，将沉降在底部的污泥刮向池中心集泥坑。同时，液面上的浮渣（如果有的话）由刮渣板和周边浮渣板形成的渐缩区域内集中，由浮渣刮耙扒到集渣斗并排出池外。

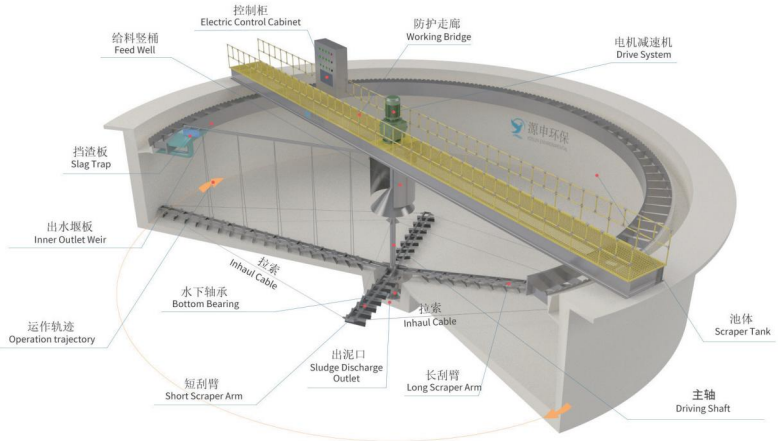


## Working Process

Center drive sludge scraper is composed of working bridge, driving unit, driving shaft, scraper, inhaule cable, feed well and control system etc.

During running, driving unit installed on the bridge drives the shaft to rotate.When shaft rotating, scraper arms on both sides connected with the shaft will work meanwhile. The sludge at the bottom of the tank will be discharged by the scraper installed on the arms.At the same time, the scum (if any) on the liquid surface is concentrated in the tapered area formed by the scum scraping plate and the surrounding scum plate, and is scraped by the scum scraping rake to the sludge collecting bucket and discharged out of the tank.

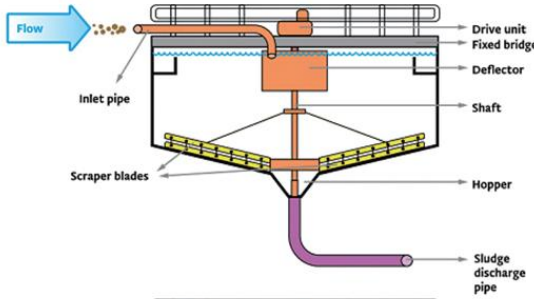


1、废水通过进水管进入系统。

The wastewater enters the system through the inlet pipe.

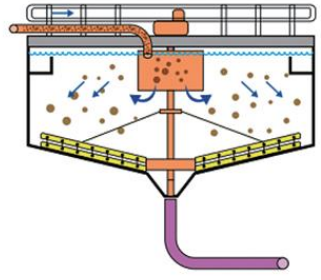

2、水中的固体物质在水箱周围扩散，并开始在水箱底部沉降。因此需要清除堆积在底部的污泥。

The solid materials present in the water spread around the tank and they start to settle at the tank bottom. Thus,it is needed to remove the sludge accumulated at thebottom.

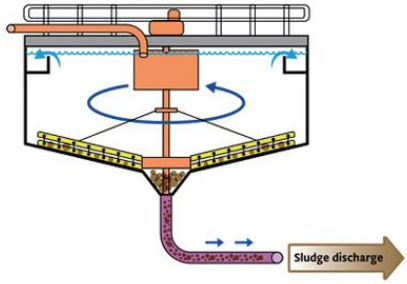


3、中心驱动定桥圆刮板通过与轴连接的刮板叶片开始移动并刮取底部的物料。刮出的污泥被收集到料斗中，并从系统中除去。

The central driven fixed bridge circular scraper starts to move and scrape the materials at the bottom by the scraper blades connected with the shaft. The sludge scraped is collected into a hopper and removed from the system.

源申环保
YOSUN ENVIRONMENTAL

Professional supplier of solid liquid separator for waste water treatment

# 中心传动式刮泥机
# Center Drive Sludge Scraper

Professional design　Exquisite craftsmanship　Focus on separating

## 产品优势

1. 工作桥采用桁架结构，简洁、美观、轻巧。
2. 维护简单方便，运行费用低。
3. 传动减速机多种选择：采用三级摆线减速机直接驱动，结构简单紧凑，检修方便；采用减速机、传递齿轮、回转轴承组合驱动，能获得极大的驱动扭矩，适用于重载场合。
4. 系统控制柜采用户外型，安全可靠，可随机控制和远程控制。
5. 设备的尺寸、材质及其他配置可根据用户需求而定。



## Product Advantages

1. Concise, beautiful and light truss structure.
2. Easy maintenance and economical cost.
3. Multiple choices of transmission reducer: the three-stage cycloid reducer is directly driven, with simple and compact structure and convenient maintenance; It is driven by reducer, transmission gear and rotary bearing, which can obtain great driving torque and is suitable for heavy-duty occasions.
4. Outdoor-type control cabinet which is safe and reliable can be controlled randomly and remotely.
5. Size, material and other configurations of the equipment can be customized.







# 中心传动刮泥机技术参数表

Center Drive Sludge Scraper Outline Dimension

| 型号 Model | 池径 Tank Diameter (m) | 水深 Water Depth (m) | 池深 Tank Depth (m) | 周边线速度 Peripheral Linear Speed (m/min) | 驱动功率 Power (kw) |
|---|---|---|---|---|---|
| ZXG4 | 4 | 2.8-3.6 | 3.2-4 | 1-2 | 0.55 |
| ZXG5 | 5 | 2.9-3.6 | 3.3-4 | 1-2 | 0.55 |
| ZXG6 | 6 | 3-3.6 | 3.4-4 | 1-2 | 0.55 |
| ZXG7 | 7 | 3.1-3.6 | 3.5-4.2 | 1-2 | 0.55 |
| ZXG8 | 8 | 3.2-4 | 3.6-4.4 | 1-2 | 0.55 |
| ZXG9 | 9 | 3.4-4.2 | 3.8-4.6 | 1-2 | 0.55 |
| ZXG10 | 10 | 3.6-4.4 | 4-4.8 | 1-2 | 0.55 |
| ZXG11 | 11 | 3.6-4.4 | 4-4.8 | 1-2 | 0.55 |
| ZXG12 | 12 | 3.6-4.4 | 4-4.8 | 1-2 | 0.55 |
| ZXG13 | 13 | 3.6-4.4 | 4-4.8 | 1-2 | 0.55 |
| ZXG14 | 14 | 3.6-4.4 | 4-4.8 | 1-2 | 0.55 |
| ZXG15 | 15 | 3.6-4.4 | 4-4.8 | 1-2 | 0.55 |
| ZXG16 | 16 | 3.6-4.4 | 4-4.8 | 1-2 | 0.55 |

## 参数表说明

Selection Table Note

样本参数及图片仅供参考，源申公司保留持续改进的权利，所有参数以双方确认为准。如有任何技问题，请与我们联系。

The Parameters and Pictures are only for reference. Yosun reserves all rights.All parameters are subject to the confirmation of both parties. More technical questions, please feel free to contact us.

# 中心传动式刮泥机外形图

Center Drive Sludge Scraper Outline Dimension

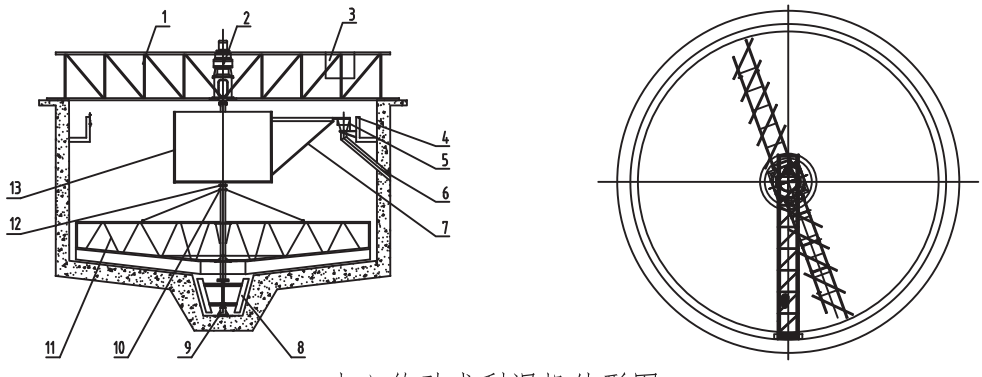


中心传动式刮泥机外形图

Center drive sludge scraper

| | | | |
|---|---|---|---|
| 1. 工作桥<br>1.Working bridge | 2. 驱动系统<br>2.drive system | 3. 系统控制柜<br>3.Electric control cabinet | 4. 出水堰板<br>4.outlet weir plate |
| 5. 挡遮板<br>5.scum baffle | 6.出渣管<br>6.Slag discharge pipe | 7. 撇渣机构<br>1.Skimmer | 8. 污泥斗搅拌桨<br>8.Mixing puddle for bottom sludge collector |
| 9. 水下轴承<br>9.Underwater bearings | 10. 拉索<br>10.inhaul cable | 11. 刮臂及刮泥板<br>11.rake arm and sludge scraper | 12. 传动轴<br>12.Drive shaft |
| 13. 稳流桶<br>13.feed well | | | |

专注分离 服务环境


## 无锡源申环保设备有限公司

Wuxi Yosun Environmental Protection Equipment Co.,Ltd.

电话TEL:+86-0510-85264060

传真FAX:+86-0510-83157565

邮箱Email:service@wxyosun.com

网址Web:(英文) https://wxyosun.com

(中文) https://www.wxyshb.com


第四版